ACCELERATING INTELLIGENCE

GC85A

ACCESS · ACCURACY · EFFICIENCY

* GC85A configuration may vary by needs.

SAMSUNG

GC85A

Ceiling-mounted Tube Head Unit

Handles, buttons, jog and touch screen are all in one layer. The THU integrates a 12.1 inch wide touch screen to increase user convenience and optimize procedure.

Type	Fully automated
Patient coverage along the longitudinal /transverse axis	Max. Longitudinal/Transverse: 902.6cm/363.6cm(9 x 4 rail)
Vertical travel range	180 cm
Tube rotation around the horizontal axis	240° (±120°)
Tube rotation around the vertical axis	340° (-157° ~ +183°)
Vertical movement speed	100 mm/sec
Soft Handling(Motorized Power Assist System)	Yes
Multi-functional display with color touch screen	12.1 inch Wide touch screen - Automatic SID measurement, Display of tube rotation angle - Automatic/Manual modification of kV, mAs and ms, Focal spot selection - System standby, System movement check, Projection setting, Provision of screen information - Image collection, Image preview, positioning help - X-ray projection related information entry, Intra-radiology lab image check possible after X-ray photography - Auto-repositioning setting, Smart Stitching function related information entry
Camera for patient monitoring and stitching	Yes

X-ray Tube Assembly

	Type A	Type B
Tube construction	Rhenium-Tungsten faced Molybdenum	Rhenium-Tungsten faced Molybdenum
Anode heat storage capacity	600 kHU (420 kJ)	300 kHU (210 kJ)
Target angle	12°	12°
Focal spot size	0.6 mm/1.2 mm	0.6 mm/1.2 mm
Permanent filtration	1.1 mm Al @75 kV	0.9 mm Al @75kV
Anode Speed	Minimum 3200 min-1 (60 Hz) Minimum 2700 min-1 (50 Hz)	

High Voltage Generator

	Type A	Type B	Type C	Type D
Max. Output*	82 kW, 150 kVp, 1000 mA	52 kW, 150 kVp, 640 mA	80 kW, 150kVp, 1000 mA	50 kW, 150 kVp, 630 mA
Exposure Voltage	40 ~ 150 kV (1 kV step)	40 ~ 150 kV (1 kV step)	40 ~ 150 kV (1 kV step)	40 ~ 150 kV (1 kV step)
Line voltage	380/400/480 VAC, 3-Phase, 50/60 Hz	380/400/480 VAC, 3-Phase, 50/60 Hz	380/400/480 VAC, 3-Phase, 50/60 Hz	380/400/480 VAC, 3-Phase, 50/60 Hz
mA range	10 ~ 1000 mA	10 ~ 640 mA	10 ~ 1000 mA	10 ~ 630 mA
Time range	0.001 ~ 10 sec	0.001 ~ 10 sec	0.001 ~ 10 sec	0.001 ~ 10 sec
mAs range	0.1~500 mAs	0.1~500 mAs	0.1~1000 mAs	0.1~1000 mAs
Generator frequency	Max. 30 kHz	Max. 30 kHz	Max. 450 kHz	Max. 450 kHz
Generator cabinet dimensions (LxWxH)	620x405x630 (HVG), 620x450x432 (H/W)	620x405x630 (HVG), 620x450x432 (H/W)	596x410x480 (HVG), 620x450x432 (H/W)	596x410x480 (HVG), 620x450x432 (H/W)

* Select 1 type of 4 kinds of High Voltage Generator
The configurations may vary by country

GC85A

AccE Detector

Wireless Portable Detector	
Detector model	F4335-AW
Detector type	Amorphous Silicon TFT / Cesium Iodide scintillator (CsI)
Dimensions	460 x 384 x 15 mm
Active detector matrix (Effective Pixel matrix)	3,040 × 2,466 pixels
Effective area	425.60 mm × 345.24 mm
Pixel pitch	140 ㎛
A/D conversion (Pixel depth)	16 bits
Spatial resolution	3.57 lp/mm
Detective Quantum Efficiency (DQE)	76% (0.0 lp/mm, Typical)
Modulation Transfer Function (MTF)	86% (0.5 lp/mm, Typical)
Installation	Wireless / Tethered
Image Acquisition	Tethered / Wireless (802.11 a/b/g/n & ac) @2.4/5 GHz
AED	Available, v3.0
Weight	Approx. 2kg (w/o Battery Set*)
Max.load capacity	400 kg for uniform load, 200 kg for local load (40 mm in diameter disk at the center)
Dust/Water-resistance	IP54
Self diagnosis	Automatic detection & alarming of line artifact
Shock logging	Real-time detection, logging and alarming of shock level
Battery charging time	Typ. 6 hrs. (tethered), Typ. 3 hrs. (battery charger)
Battery Operation Time	500 images for 4 hrs. Waiting for more than 10 hrs under deep sleep mode

*The Battery Set includes the battery and the battery cover

Wireless Portable Detector	
Detector model	S4335-AW
Detector type	Amorphous Silicon TFT / Cesium Iodide scintillator (CsI)
Dimensions	460 x 384 x 15 mm
Active detector matrix (Effective Pixel matrix)	3,040 × 2,466 pixels
Effective area	425.6 mm × 345.24 mm
Pixel pitch	140 ㎛
A/D conversion (Pixel depth)	16 bits
Spatial resolution	3.57 lp/mm
Detective Quantum Efficiency (DQE)	76% (0.0 lp/mm, Typical)
Modulation Transfer Function (MTF)	86% (0.5 lp/mm, Typical)
Installation	Wireless / Tethered
Image Acquisition	Tethered / Wireless (802.11 a/b/g/n & ac) @2.4/5 GHz
AED	Available, v3.0
Weight	Approx. 3 kg
Max.load capacity	400 kg for uniform load, 200 kg for local load (40 mm in diameter disk at the center)
Max.bend capacity	> 200 kg @ 3-point bending condition
Dust/Water-resistance	IP54
Self diagnosis	Automatic detection & alarming of line artifact
Detector shock logging*	Real-time detection, logging and alarming of shock level
Battery charging time	Typ. 6 hrs. (tethered), Typ. 3 hrs. (battery charger)
Battery Operation Time	500 images for 4 hrs. Waiting for more than 10 hrs under deep sleep mode

* This feature is only for F4335-AW, S4335-AW and S4343-AW detector

GC85A

AccE Detector

Wireless Portable Detector	
Detector model	S4343-AW
Detector type	Amorphous Silicon TFT / Cesium Iodide scintillator (CsI)
Dimensions	460 x 460 x 15 mm
Active detector matrix (Effective Pixel matrix)	3,040 × 3,036 pixels
Effective area	425.60 mm × 425.04 mm
Pixel pitch	140 ㎛
A/D conversion (Pixel depth)	16 bits
Spatial resolution	3.57 lp/mm
Detective Quantum Efficiency (DQE)	76% (0.0 lp/mm, Typical)
Modulation Transfer Function (MTF)	86% (0.5 lp/mm, Typical)
Installation	Wireless / Tethered
Image Acquisition	Tethered / Wireless (802.11 a/b/g/n & ac) @2.4/5 GHz
AED	Available, v3.0
Weight	Approx. 3.6 kg
Max.load capacity	400 kg for uniform load, 200 kg for local load (40 mm in diameter disk at the center)
Max.bend capacity	> 200 kg @ 3-point bending condition
Dust/Water-resistance	IP54
Self diagnosis	Automatic detection & alarming of line artifact
Detector shock logging*	Real-time detection, logging and alarming of shock level
Battery charging time	Typ. 6 hrs. (tethered), Typ. 3 hrs. (battery charger)
Battery Operation Time	500 images for 4 hrs. Waiting for more than 10 hrs under deep sleep mode

* This feature is only for F4335-AW, S4335-AW and S4343-AW detector

Wireless Portable Detector	
Detector model	S3025-AW
Detector type	Amorphous Silicon TFT / Cesium Iodide scintillator (CsI)
Dimensions	350 x 287 x 15 mm
Active detector matrix	2536 x 2024 pixels (W x H)
Effective area	314.5 mm × 251.0 mm (W x H)
Pixel pitch	124 ㎛
A/D conversion (Pixel depth)	16 bits
Spatial resolution	4.0 lp/mm
Detective Quantum Efficiency (DQE)	75% (0 lp/mm, Typical)
Modulation Transfer Function (MTF)	87% (0.5 lp/mm, Typical)
Installation	Wireless only
Image Acquisition	Wireless (802.11 n/ac) @2.4/5 GHz
AED	N/A
Weight	2.1 kg (Typical)
Max.load capacity	400 kg for uniform load, 200 kg for local load (40 mm in diameter disk at the center)
Dust/Water-resistance	IP67
Self diagnosis	Automatic detection & alarming of line artifact
Battery charging time	2 hrs. (AC-DC adaptor)
Battery Operation Time	270 images for 7.5 hrs

GC85A

AccE Standard Detector

Wireless Portable Detector	
Detector model	S4335-AWM
Detector type	Amorphous Silicon TFT / Cesium Iodide scintillator (CsI)
Dimensions	460 x 384 x 15 mm
Active detector matrix (Effective Pixel matrix)	3,040 × 2,466 pixels
Effective area	425.6 mm × 345.24 mm
Pixel pitch	140 ㎛
A/D conversion (Pixel depth)	16 bits
Spatial resolution	3.57 lp/mm
Detective Quantum Efficiency (DQE)	65% (0.0 lp/mm, Typical)
Modulation Transfer Function (MTF)	88% (0.5 lp/mm, Typical)
Installation	Wireless / Tethered
Image Acquisition	Tethered / Wireless (802.11 a/b/g/n & ac) @2.4/5 GHz
AED	Available, v3.0
Weight	Approx. 3.2 kg
Max.load capacity	400 kg for uniform load, 200 kg for local load (40 mm in diameter disk at the center)
Max.bend capacity	> 200 kg @ 3-point bending condition
Dust/Water-resistance	IP54
Self diagnosis	Automatic detection & alarming of line artifact
Battery charging time	Typ. 6 hrs. (tethered), Typ. 3 hrs. (battery charger)
Battery Operation Time	500 images for 4 hrs. Waiting for more than 10 hrs under deep sleep mode

Wireless Portable Detector	
Detector model	S4343-AWM
Detector type	Amorphous Silicon TFT / Cesium Iodide scintillator (CsI)
Dimensions	460 x 460 x 15 mm
Active detector matrix (Effective Pixel matrix)	3,040 × 3,036 pixels
Effective area	425.60 mm × 425.04 mm
Pixel pitch	140 ㎛
A/D conversion (Pixel depth)	16 bits
Spatial resolution	3.57 lp/mm
Detective Quantum Efficiency (DQE)	65% (0.0 lp/mm, Typical)
Modulation Transfer Function (MTF)	88% (0.5 lp/mm, Typical)
Installation	Wireless / Tethered
Image Acquisition	Tethered / Wireless (802.11 a/b/g/n & ac) @2.4/5 GHz
AED	Available, v3.0
Weight	Approx. 3.6 kg
Max.load capacity	400 kg for uniform load, 200 kg for local load (40 mm in diameter disk at the center)
Max.bend capacity	> 200 kg @ 3-point bending condition
Dust/Water-resistance	IP54
Self diagnosis	Automatic detection & alarming of line artifact
Battery charging time	Typ. 6 hrs. (tethered), Typ. 3 hrs. (battery charger)
Battery Operation Time	500 images for 4 hrs. Waiting for more than 10 hrs under deep sleep mode

GC85A

AccE Standard Detector

Wireless Portable Detector	
Detector model	S3025-AWM
Detector type	Amorphous Silicon TFT / Cesium Iodide scintillator (CsI)
Dimensions	350 x 287 x 15 mm
Active detector matrix	2536 x 2024 pixels (W x H)
Effective area	314.5 mm × 251.0 mm (W x H)
Pixel pitch	124 ㎛
A/D conversion (Pixel depth)	16 bits
Spatial resolution	4.0 lp/mm
Detective Quantum Efficiency (DQE)	60% (0 lp/mm, Typical)
Modulation Transfer Function (MTF)	90% (0.5 lp/mm, Typical)
Installation	Wireless only
Image Acquisition	Wireless (802.11 n/ac) @2.4/5 GHz
AED	N/A
Weight	1.95 kg (Typical)
Max.load capacity	400 kg for uniform load, 200 kg for local load (40 mm in diameter disk at the center)
Dust/Water-resistance	IP67
Self diagnosis	Automatic detection & alarming of line artifact
Battery charging time	2 hrs. (AC-DC adaptor)
Battery Operation Time	270 images for 7.5 hrs

GC85A

Automatic Collimator with Each Blade Control

Flexible and accurate function reduces radiation dose and improves functions.

Automatic collimation	
Blade control	4-axis motorized control
Copper prefilter	0.1 mm ; 0.2 mm ; 0.3 mm
Collimation control	Manual or Automatic
Lamp	LED lamp > 160lux
Collimation Size Fixed	Maintain the user-selected Collimation size
Collimation Size Undo	Return the previous collimation size in accordance with each protocol

Scatter Radiation Grid

Patient table*	460 mm×460 mm, 85 lp/cm, 10:1, SID 110 cm, Carbon cover 460 mm×460 mm, 92 lp/cm, 10:1, SID 110 cm, Carbon cover
Wall stand*	460 mm×460 mm, 85 lp/cm, 10:1, SID 140 cm, Carbon cover 460 mm×460 mm, 92 lp/cm, 10:1, SID 140 cm, Carbon cover 460 mm×460 mm, 85 lp/cm, 10:1, SID 180 cm, Carbon cover 460 mm×460 mm, 92 lp/cm, 10:1, SID 180 cm, Carbon cover

*Optional (Select 1 of 2 kinds of Grid)

Patient Table

The flexible 6-way table can endure heavy weight. Thin table legs make the best use of fixed space, and the outstanding traffic line will improve workflow.

6-Way movement	
Table top dimensions (L×W)	2,410 mm×812 mm
Tabletop material	HPL
Table Top X-ray density	1.44 mmAl
Elevating (Up / Down) range	545~900 mm
Longitudinal (Left & Right) movement range	±480 mm
Transverse (Front & Rear) movement range	±140 mm
Longitudinal Patient coverage (without patient repositioning)	2,078 mm
Bucky movement range	688 mm
Max. Patient weight	200 kg (Dynamic load off center) / 310 kg (Dynamic load center) / 350 kg (Static load center)
Elevating speed from min. to max height (No load)	40 mm/sec
Foot switch	Wireless foot switch (Elevating Up/ Down, Floating Table Top)
Auto tracking	Longitudinal tracking of detector with longitudinal travel and rotation of tube
Auto Centering	Automatically adjusts and centers the detector and the tube
Shared Bucky™	Both Detectors (F4335AW, S4343-AW and S4335-AW) are available on a bucky
Available Detector Size	17 x 17 inch / 14 x 17 inch
Detector Installation	Fixed or Removable
Grid configuration	85lp/cm or 92lp/cm or none(SID 110cm / 140cm / 180cm)

GC85A

Wall Stand

	Type A	Type B
Up / Down range	280~1,850 mm (Motorized)	
Receptor tilting	-20°~+90° (Motorized)	N/A
Detector rotate range	0°~+90°	N/A
Receptor Rotation	Manual and 0°, 45°, 90° detent	N/A
Auto tracking	Vertical and rotational tracking of tube with vertical travel and tilting of detector	
Auto Centering	Automatically adjusts and centers the detector and the tube	
Foot switch*	Wireless foot switch (Elevating Up/ Down)	
LED Indicator	The change of the light on the column shows the step of the test directly	
Operating Panel	Multi-functional operating panel Motorized fast Up/ Down Motorized slow Up/ Down (Precise Positioning with tumbler switch) Motorized Receptor Tilting (-20°~ 90°) Preprogrammed exam positions -Receptor Bottom~Top/ Tilting (-20°~90°), Parking/Table/ Stand/ Stand tilting Mode Auto Centering, Auto Sync On/Off, Auto Run - Auto Sync : Enable the synchronization of the detector and Tube - Auto Run : Moves the system to a preset position defined at the THU (Tube Head Unit) Collimator size lock	
Available Detector Size	17 x 17 inch	
Detector Installation	Fixed or Removable	
Grid configuration	85lp/cm or 92lp/cm or none(SID 110cm / 140cm / 180cm)	

Automatic Exposure Control (AEC)

AEC function prevents excessive radiation exposure.

Minimum Response Time	Less than 1 mS
Output Sensitivity(Gain Range)	Adjustable 0.046 ~ 0.91 V/ µGy @76 kV. Additional output sensitivities available upon request
Ionization Chamber Potential	+75 VDC ±10 V (internally generated)
Output Reproducibility	Less than ±0.045 Coefficient of Variation
Output	Linear ramp with no more than ±5 % deflection in full output scale.
Field Matching	Outputs of multi-field chambers are individually adjustable to within 5 % of one another.
X-ray % Transmission	No less than 85 % from 50 kV to 150 kV with 2.5 mm to 3.0 mm total aluminum equivalent beam filtration from the x-ray tube and collimator
Power Supply Requirement	±11.4 VDC ~ ±15.75 VDC@ 0.1 A unless specified otherwise
Operating Temperature	10 ~ 40 °C
Operating Humidity	10 ~ 60 % relative humidity non-condensing
Operating Atmospheric Pressure	860 ~ 1060 hPA
Transport and Storage Temperature Range	-40 ~ 70 °C
Transport and Storage Humidity Range	10 % ~ 95 % relative humidity non-condensing
Transport and Storage Atmospheric pressure	860 ~ 1060 hPA

GC85A

Dose Area Product (DAP)*

DAP provides patient level dose estimates and recommended exposure. Also connected to PACS system, relevant information is stored on PACS, enabling cumulative dose tracking.

Response	
- Without additional absorber	800 pC/µGy · m^2
- With additional absorber(0.5 mm Al)	920 pC/µGy · m^2
Response versus radiation quality	-6 % / +0 % (50~150 kV, acc. IEC 60580)
Quality equivalent filtration	0.2 mm Al @ 70 kV
Transparency	> 70 %
Active area (max.)	1 ~ 200 cm^2
Chamber voltage	300 V
Distance of the electrodes	6 mm
Stabilization time	5 min
Transportation Temperature	-20 ~ 60 °C
Transportation Humidity	10 ~ 80 % (max. 20g/m^3 ; non-condensing)

*Optional

S/W Optional Items

	Description
SimGrid™	Enhancing the visibility of image without physical grid by compensating the decrease in contrast caused by scatter radiation
SimGrid™ In-bucky	Extending SimGrid™ function to Stand/Table protocols
Bone Suppression	Improving the clarity of soft tissues by suppressing the appearance of bones in chest images
Auto Lung Nodule Detection	ALND helps users find lung nodules on x-ray Chest PA images
S-Enhance	Enhancing visibility of foreign body in chest, abdomen and l-spine images
Remote View	Transferring configured image through a web browser using the IP address
QAP Package	Quality Assurance Program and Al Filter/Phantom
S-DAP	Software DAP(Dose Area Product)
S-Share™[1]	Sharing detectors between GC85A and Samsung DR system
Value-up Package	Voice Guide / Image Auto Rotation / Additional Patient Information / Prior Exam Review / S-Align™ Info. To DICOM / Detector Connection Alarm / Bariatric Exposure Management / Easy Protocol Management / Smart Crop Management
Mirror View	Provide secured screen sharing of S-Station to the display device using Wi-Fi CERTIFIED Miracast™
WBS Activation	Support verified wireless barcode scanner - Refer to the verified scanner list - Interface(Host/Wireless Scanner) : USB Serial/Bluetooth(2.4GHz-2.5GHz, ISM)
Vision Auto	Enhancing patient positioning and system setting workflow with live camera
Vision Stitching	Enhancing stitching workflow with live camera

1) There are restrictions on sharing between detectors, please refer to separate guide

GC85A

Smart Stitching* - Spine and long bone imaging

The X-ray tube and the detector move automatically when a full body image is being captured. It captures 2 or more images consecutively and then stitches the images into one. The Smart Stitching function can be operated using in two different methods; Tube Angle and Collimator Control.

Stitching Range at Patient Table	max 1,095 mm for 3-images(17x14, 17x17 detector), 1,015 mm for 4-images(14x17 detector)
Stitching Range at Wall Stand	max 1,780 mm for 5-images
Average acquisition time for a 3-images exam	< 15 sec (Table) < 12 sec (stand)
Image pasting and processing time for a 3-image exam	< 6 sec from last exposure (Stand / Table)
Grid base stitching	both table and stand
Grid configuration	85lp/cm or 92lp/cm or none(SID 110cm / 140cm / 180cm)

*Optional

Imaging Workstation - S-Station

Hardware	Type A
- CPU	Intel Core Xeon
- RAM	8G or 16G
- Storage	SSD 256 GB + HDD 1 TB - Image storage capacity F4335-AW/AWM : ~ 14,000 images S4343-AW/AWM : ~ 12,000 images S4335-AW/AWM : ~ 14,000 images S3025-AW/AWM : ~ 30,000 images - Hard drive encryption
- Operating system	Microsoft Windows 10
- Accessories	Keyboard, Mouse
Software	
- Image acquisition times* (X-ray exposure to image)	F4335-AW(Tethered) : Preview < 2 sec, Final < 4 sec F4335-AW(Wireless) : Preview < 2 sec, Final < 5 sec S4343-AW/AWM(Tethered) : Preview < 2 sec, Final < 5 sec S4343-AW/AWM(Wireless) : Preview < 2 sec, Final < 6 sec S4335-AW/AWM(Tethered) : Preview < 2 sec, Final < 4 sec S4335-AW/AWM(Wireless) : Preview < 2 sec, Final < 5 sec S3025-AW/AWM(Wireless) : Preview < 3.5 sec, Final < 6 sec
* It depends on the image processing parameters and wireless condition	
- Post processing	S-Vue™ - Protocol(Body part) adaptive multi scale image processing - Advanced noise reduction processing - Excess contrast reduction processing for minimizing metal artifact
- Display functions	Window level control, Zoom / Magnifier. Flip / Rotate, Invert, Shutter (Fixed / Auto / Manual), Grid View Annotations (Marker / Free text / Arrow / Line / Length / Angle / Cobbs angle / Rectangle / Ellipse) Layout (1×1, 1×2, 2×1, 2×2, Full Screen View)
- Auto cropping	Auto shutter (Rectangle / Polygon)
- Auto APR (Anatomical Programmed Radiography) matching	X-ray conditions, Mechanical position, Image processing parameters, Marker etc
- Multi-language	English, French, German, Italian, Spanish, Russian, Simplified Chinese, Portuguese, Turkish, Finnish, Swedish, Czech, Polish

Display*

	Type A	Type B	Type C
Size	24”	23”	27”
Resolution	1920 x 1080	1920 x 1080	2560 x 1440
Touch	No	Yes	No
Dicom	No	Yes	Yes

*Optional (Select 1 of 3 kinds of monitors)

GC85A

Control Interface Box (CIB)

Power On/Off switch	For Ceiling suspension, Patient table, Wall stand and S-Station
Exposure button	2-Step(Ready, Shot) button
X-ray exposure Indicator	Standby : None, Ready : Green, Exposure : Yellow
Emergency stop button	Yes

Remote controller

Yes
Ceiling X, Y, Z Moving
Auto Centering, Auto Sync, Auto Detector
Table Up & Down, Table Top free
Stand Up & Down, Fast Up & Down, Motorized Receptor tilting
Preprogrammed exam positions, THU control
Parking, Table, Stand, Wall Stand tilting Mode
Collimator lamp control
Vertical & Horizontal enlargement / Reduction of collimator
Collimator Size Fixed, Undo(return to pre-position)

Network Specifications

DICOM functions	
- DICOM Verification (SCU)	
- DICOM Modality worklist (SCU)	Interface with HIS / RIS with auto refresh option
- DICOM MPPS (SCU)	Send the status of exams to HIS / RIS
- DICOM Storage (SCU)	Send Image (DX or CR IOD) and GSPS to PACS
- DICOM Storage commitment (SCU)	Send commitment status
- DICOM Grayscale print (SCU)	Support DICOM printers
- DICOM Query / Retrieve (SCU)	Query and retrieve DX and CR images from PACS
- DICOM GSPS (SCU)	Send overlay information along with the image
- DICOM Media exchange (DICOM DIR)	Patient images export to DVD/CD
-DICOM DOSE Structured Report (SCU)	Send Dose Information to DOSE Server
IHE Integration Profile	
- Scheduled Workflow	Acquisition Modality
- Patient Information Reconciliation	Acquisition Modality
- Radiation Exposure Monitoring	Acquisition Modality
- Consistent Time	Time Client
- Portable Data for imaging	Portable Media Creator

Remote Maintenance System (RMS)

The remote management system analyses performance and emerging technical issues.

Real-time use information	Rounds of filming, distribution of use, operating ration, new & re-filming rate and accumulated radiation dose.
Remote access	Real-time monitoring system enables quick responses to problematic situations. Remote assistant service allows auto-diagnosis and remote repair.

GC85A

Accessories

Accessories	P-bar for lateral patient for Stand
	Patient hand grips for Table
	Barcode Scanner*
	Patient compression belt for Table*
	Lateral detector holder*
	Grid holder*
	Auto Stitching Stand*
	Detector Weight Distribution Cap* (43x43 cm size)
	Trolley* (220 kg, 786 mm)
	Cone Rail*
	QAP* - SW V3.0, 21 mm AL Filter, Phantom (Pehamed co. DIGRAD A+K)
	DVD-RW* (External USB type)
	RFID Reader (Support 125kHz, 13.56MHz) (Recommended card type : HID Prox / iCLASS ID)
Detector Accessory*	Detector Battery Charger
	Detector Battery
Grid*	Portable Grid - 4335 : 404 x 480 mm, 85 lp/cm, 10:1, SID 110 cm, Carbon cover 404 x 480 mm, 92 lp/cm, 10:1, SID 110 cm, Carbon cover - 4343 : 480 x 480 mm, 85 lp/cm, 10:1, SID 110 cm, Carbon cover 480 x 480 mm, 92 lp/cm, 10:1, SID 110 cm, Carbon cover

*Optional

Installation Data

The entire system is powered via a single line voltage connection.

Power connection	3-phase, 380/400/480 VAC, 50/60 Hz
Power rating	120 kVA 5 A (Nominal) 180/150 A (Momentary)
Wall stand	558 mm×877 mm×2,275 mm (Stroke : 280~1,850 mm) Approx. 180 kg
Ceiling suspension	4,008 mm×3,010 mm×1,253 mm (The rail size(W X L) can be changed by depending on room size) Approx. 390 kg
Patient table	2,410 mm×812 mm×545 mm (Vertical Stroke : 355 mm) Max. 350 kgf supported Approx. 210 kg
System cabinet	Type A & B: 620mmX405mmX630mm, Approx. 96kg(HVG), 620mmX450mmX432mm, Approx. 62kg(H/W) Type C & D: 596mmX410mmX480mm, Approx. 63kg(HVG), 620mmX450mmX432mm, Approx. 62kg(H/W)
Operating Temperature	Temperature range : +10~+40 °C
Operating Humidity	Relative humidity : 30~75 %
Operating Atmospheric Pressure	Air pressure : 70~106 kPa
	Storage / Transport
Transportation Temperature	- Temperature range : -10~+55 °C
Transportation Humidity	- Humidity range : 10~80 %
Transportation Atmospheric Pressure	- Pressure range : 70~106 kPa
Rail	Longitudinal 3 ~ 5 m (0.5 m steps), 6.5m (Special Order) Transverse 2.5 ~ 4 m (0.5 m steps)

GC85A

Room Considerations

Ceiling Suspension

SCALE : 1/50 (A3)

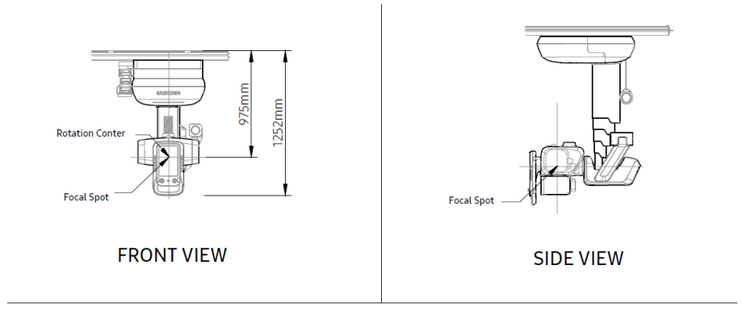

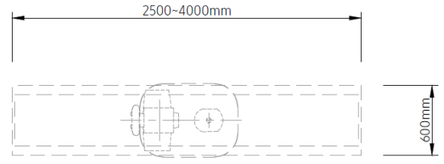

TOP VIEW

Premium Table

SCALE : 1/50 (A3)

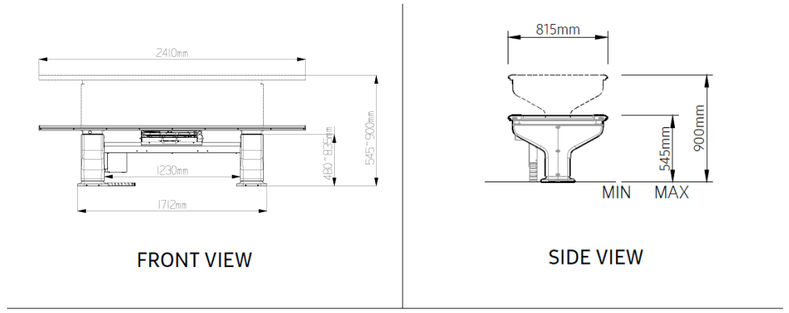

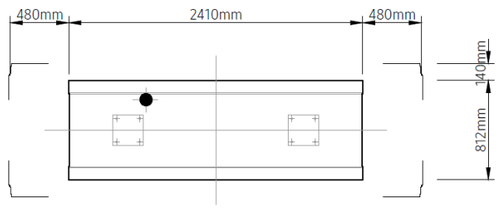

TOP VIEW

GC85A

Room Considerations

Wall Stand – Type. A

SCALE : 1/50 (A3)

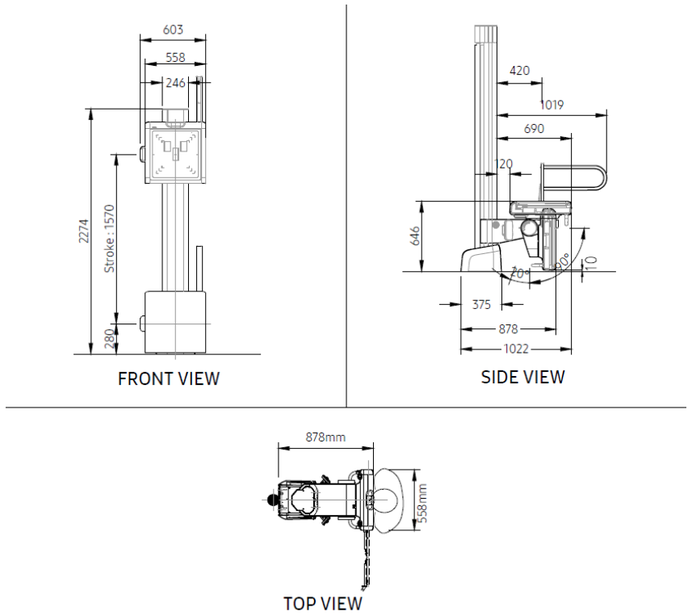

Wall Stand – Type. B

SCALE : None

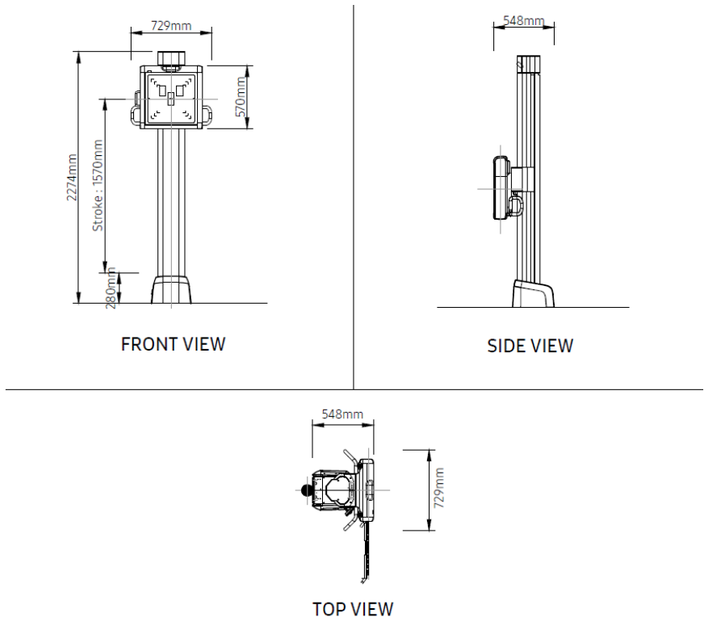

GC85A

Room Considerations

Stitching Stand

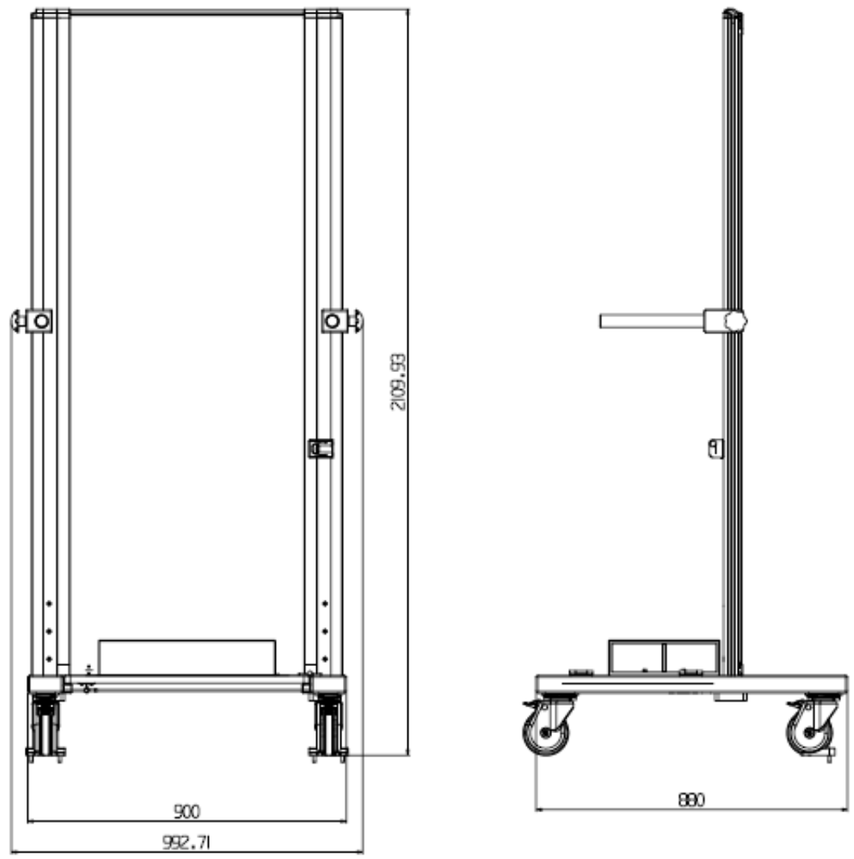

Stitching Foot Step

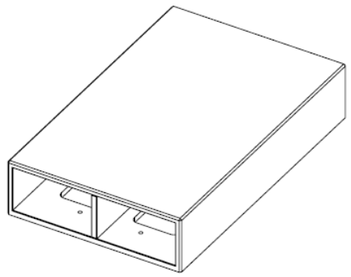

314.5x500x100 [mm]

About Samsung Electronics Co., Ltd.

Samsung Electronics Co., Ltd. inspires the world and shapes the future with transformative ideas and technologies. The company is redefining the worlds of TVs, smartphones, wearable devices, tablets, cameras, digital appliances, printers, medical equipment, network systems, semiconductor and LED solutions. For the latest news, please visit the Samsung Newsroom at news.samsung.com.

For more information

For more information about GC85A, visit

www.samsunghealthcare.com

GC85A Datasheet v4.3-230316-EN

Represented by:
Commonwealth X-Ray, Inc.
www.commonwealthxray.net
cxr@cxrinc.net
859-885-4854

© 2022 Samsung Electronics All rights reserved.
Samsung Electronics reserves the right to modify the design, packaging, specifications, and features shown herein, without prior notice or obligation.

SAMSUNG